HB300DR

High Bay • Low Voltage • Passive Infrared Occupancy Sensor Power Module with Isolated Relay

Installation Instructions

DESCRIPTION AND OPERATION

The HB300DR occupancy sensor is designed for automatic lighting control in warehouse and high bay applications. It contains a passive infrared sensor (PIR). The HB300DR series sensors are modular and are made up of two parts, a Power Module (HB300DR) and a Lens (HBLx). The coverage area is determined by the lens module. The lenses are interchangeable with any HB3xx series sensor. See the Coverage Guide for more information.

The HB300DR uses a set of DIP switches to set the time delay and PIR sensitivity. The HB300DR operates at 24VDC and requires a Watt Stopper power pack.

The HB300DR has an occupancy controlled output (Blue wire) a daylighting and occupancy controlled output (Violet wire) and an isolated relay output, dry contact rated at 1 amp, 30VAC/VDC, which is controlled by occupancy. When connected to a Watt Stopper auxiliary pack, the isolated relay can control an additional lighting load or HVAC.

Used with appropriate power and auxiliary packs, the HB300DR can control separate loads in the same fixture, allowing for energy conservation by turning OFF one set of lamps in a fixture when there is enough daylight and allowing other lamps to be controlled solely by occupancy. This permits having some artificial light when a space is occupied even though the rest of the fixture is held OFF due to ambient light.

Daylighting Feature

Daylighting control turns off the luminaire 3 minutes after the ambient light level goes above the adjustable setpoint (2 to 200fc) regardless of occupancy. This time delay helps avoid cycling the luminaire unnecessarily. A factory set 20% deadband on the lower end provides a slight delay before turning the lights ON. Lights turn ON only when ambient daylight goes below the setpoint and motion is detected.

The HB300DR is designed so that it can measure light levels by looking up toward a skylight, or down toward the task area. Daylighting can be disabled by turning DIP switch #9 ON.

To configure the daylight sensor use a small flat-blade screwdriver to pry off the appropriate lens cover.

- To look up toward a light source such as a skylight, remove the lens cover from the top of the daylight sensor.
- To look down toward the task area, remove the lens cover from the bottom of the daylight sensor.

COVERAGE

Coverage patterns, density and range, are determined by the type of Lens attached to the HB300DR.

For a complete description of each lens coverage pattern, see the HBLx Lens COVERAGE GUIDE.

HB300DR-L3

HB300DR-L1

SPECIFICATIONS

HB300DR Power Module

Voltages 24VDC
Power consumption 16mA
Power supply
B-series or BZ power pack ..... up to 6 HB300DRs
Outputs
Blue wire ..... Occupancy control
Violet wire ..... Daylighting and occupancy control
Isolated relay ..... Occupancy control
Dry contact 1 amp, 30VAC/VDC for additional lighting load or HVAC
Light Level 2-200fc
Adjustment ..... Trimpot

US Patents: ..... 4,787,722 • 4,874,962 • 5,124,566

Fig. 1: HB300D Power Module

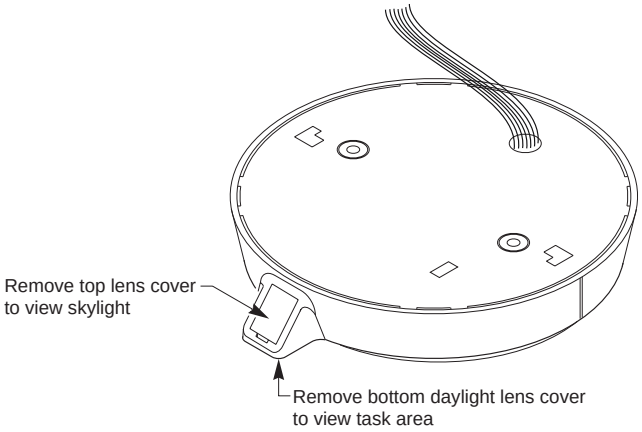

INSTALLATION

CAUTION

TURN THE POWER OFF AT THE CIRCUIT BREAKER BEFORE INSTALLING THE SENSOR.

1. Determine the mounting location appropriate to the features of the power module and the coverage area. Careful consideration must be given to sensor placement. Avoid placing the sensor where shelving or other obstructions may block the sensor's line of sight.

   Daylighting models must be located so that the daylight sensor on the unit is not obstructed. The light sensor is designed so that it can either look UP toward a skylight or DOWN toward the task area. (See Daylighting.)
2. Make sure that you have the appropriate accessories for the sensor mounting configuration. (See Mounting Options.)
3. Assemble any necessary mounting accessories and attach them to the power module, making sure that the flying leads from the power module are accessible.
4. Connect the line voltage and load wires to the power pack leads as shown in the Wiring Diagram.
   - Do not allow bare wire to show.
   - Make sure all connections are secure.
5. Attach the Lens to the HB300DR as shown in Fig. 4.
6. Restore power from the circuit breaker.

WIRING

Fig. 2 shows typical wiring. It provides occupancy control of Load #1 and Daylighting with occucancy control for Load #2.

Alternatively, to provide Daylight & occupancy control to Load #1 and only occupancy control to Load #2, connect the HD300DR Violet wire to the Blue wire of the Power Pack and connect the HB300DR Blue wire to the Auxiliary Pack Blue wire.

Fig. 2: HB300DR Wiring

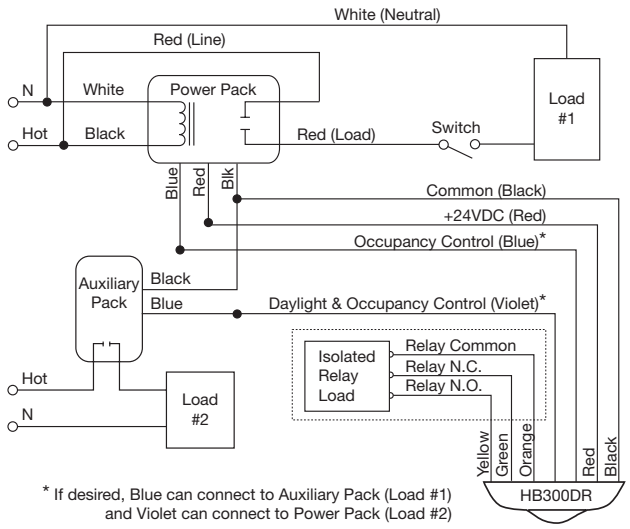

MOUNTING OPTIONS

The HB300DR can be attached either directly to the fixture surface via the two screw holes provided in the Power Module or using the HBNB3 back box and chase nipple. The Extender Module (HBEM3) allows attaching the sensor to the side of the fixture in a number of configurations using provided chase nipples.

Surface mounting requires holes in the fixture to pass wires and attach two screws through the surface mounting screw holes on the component side of the Power Module as shown below.

Fig. 3: HB300DR Components

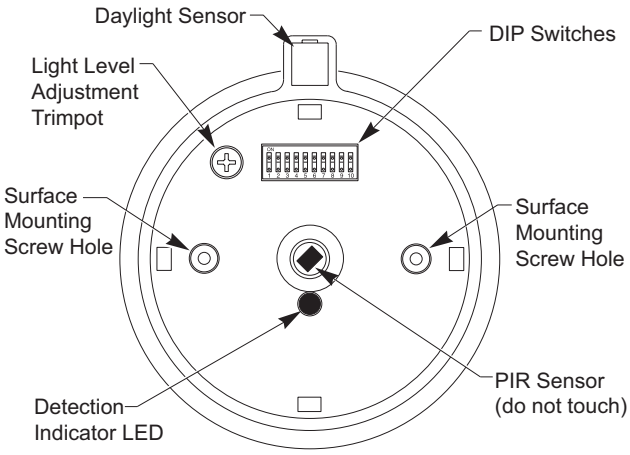

HBNB3 back box mounting requires a standard 1/2" knockout for the chase nipple. The box comes ready for side mounting. It can be modified for rear mounting as follows:

1. Pop out the cap in the rear knockout.
2. Un-snap the chase nipple from the side mount and snap into the rear mounting hole.
3. Use the cap to close the side mount hole.
4. The chase nipple provided can be pushed into a standard 1/2" knockout in a metal fixture (max of 1 mm (0.04") thick metal) without the need for the included internal nut. The nut can be used for added security if it is felt to be necessary.
5. The Power Module mounts to the back box with a bayonet type fitting requiring a slight twist of the units to lock them into place.

The HBEM3 extender module shown in Fig. 4 allows threading the wires through its chase nipples and into the fixture for connection. The two sides of the HBEM3 are then snapped together to protect the wires. The short chase nipple is designed to snap into the HBNB3 connection box while the longer chase nipple snaps into any metal fixture or connection box with a standard knockout. The caps on the HBEM3 can be removed in various configurations to allow moving the chase nipples and adjusting the height of the sensor on the fixture.

Fig. 4: Using the HBNB3 box and HBEM3 Extender Module

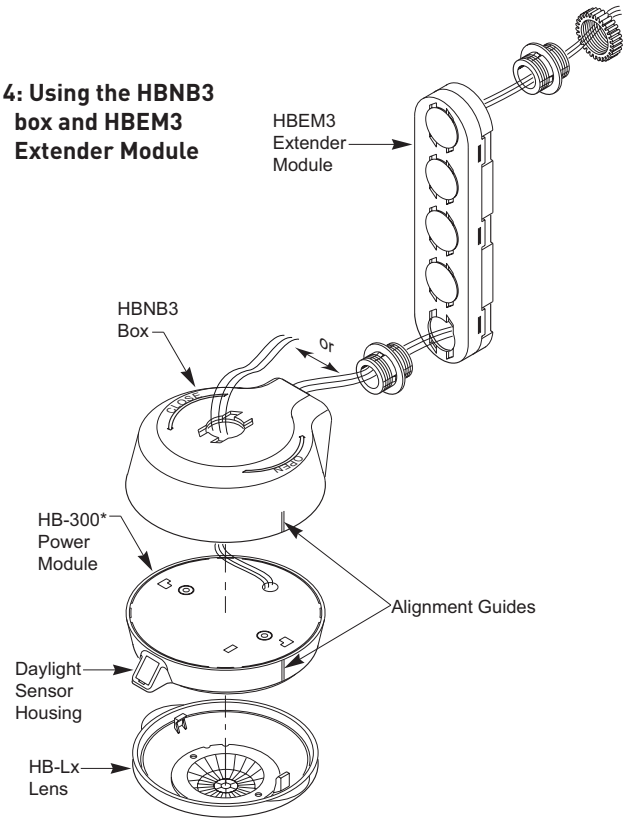

ADJUSTMENTS

The sensor is factory pre-set as follows:

Light level trimpot .....Maximum, fully clockwise: when ambient light measured by the sensor is above 200fc, the sensor holds OFF the load

PIR Sensitivity (switches 1 & 2)....Medium 85%

Time Delay (switches 3-7).....10 minutes

Overrides (switches 8-10) .....See table, bottom of this page

Factory Switch Settings

1	2	3	4	5	6	7	8	9	10
ON	OFF	OFF	OFF	ON	ON	ON	OFF	OFF	OFF

PIR Sensitivity (Switches 1-2)

It may be necessary to adjust the PIR sensitivity if there is any environmental interference causing false triggers or if sensitivity needs to be increased for your particular application. The units are factory pre-set to medium, which should work in most applications. Change the switch settings to adjust sensitivity.

Switch	1	2	PIR SENSITIVITY
	OFF	OFF	100% (HIGH)
	ON	OFF	85% (MEDIUM)
	OFF	ON	75% (LOW)
	ON	ON	60% (LOW)

Time Delay (Switches 3-7)

Use DIP switches 3 to 7 to adjust the time delay.

Switch	3	4	5	6	7	TIME DELAY
	ON	ON	ON	ON	ON	15 seconds
	OFF	ON	ON	ON	ON	5 minutes
	OFF	OFF	ON	ON	ON	10 minutes
	OFF	OFF	OFF	ON	ON	15 minutes
	OFF	OFF	OFF	OFF	ON	20 minutes
	OFF	OFF	OFF	OFF	OFF	30 minutes

PIR and Light Level Overrides (Switches 8-10)

Overrides can disable features of the HB300DR power module. The table at the bottom of this page describes the override functions.

Light Level Setpoint (Trimpot)

The ambient light level is factory set at maximum with the light level trimpot in the fully clockwise position. Once the sensor is installed the trimpot can be adjusted (turned down, counter-clockwise) so that the luminaire is forced to turn OFF when there is enough ambient light. This is best done at the time of day that the ambient light level is that which is required and gives enough light at the work surface. Adjustments should be made in small increments, waiting 3 minutes between them for the sensor to react to the change. Care should be taken not to block the daylight sensor port.

Switch		HB300DR PIR sensor + Daylighting + Isolated Relay
8	Off	Blue wire & Isolated Relay controlled by occupancy. Isolated Relay contacts normal (NO=open, NC=closed). Violet wire controlled by occupancy + daylighting. ON when below light level setpoint and occupancy detected. OFF when above light level setpoint even if occupancy is detected.
	On	Override PIR: Blue wire always ON and Isolated Relay contacts reversed (NO=closed, NC=open). Violet wire controlled only by daylighting: ON when below light level setpoint. OFF when above light level setpoint.
9	Off	Blue wire & Isolated Relay controlled by occupancy. Isolated Relay contacts normal (NO=open, NC=closed). Violet wire controlled by occupancy + daylighting. ON when below light level setpoint and occupancy detected. OFF when above light level setpoint even if occupancy is detected.
	On	Override Daylighting: Blue wire & Isolated Relay controlled by occupancy. Isolated Relay contacts normal (NO=open, NC=closed). Violet wire controlled by occupancy only. ON when occupancy detected. OFF when no occupancy detected and time delay expires.
10	Off	Not Used
	On	Not Used

IMPORTANT START-UP INFORMATION

When the power module is installed and power is connected, the load comes ON and stays ON for 50 seconds regardless of light level. This warm-up period only occurs during installation or after a power failure of 5 minutes or more.

- If the sensor detects occupancy during the warm-up, the lights stay ON as long as it continues to detect motion, plus the Time Delay.
- If no occupancy is detected during the warm-up, the light turns OFF after the initial 50 second warm-up period.

See table below for the light level and motion detection functions:

PIR sensor	Ambient Light	Delay Time	Light Level Output
No detection	High	N/A	OFF
No detection	Low	N/A	OFF
Valid detection	Change from HIGH to LOW	ON delay for 45 seconds	ON in 45 seconds
Valid detection	Change from LOW to HIGH	OFF delay for 3 minutes	OFF in 3 minutes

TROUBLESHOOTING

During the sensor warm-up period, which can last up to a minute after power is applied to the power module (or after a power outage of 5 minutes or more), the load can be either ON or OFF, depending on the status of the relay before the sensor was powered down. After warm-up, the sensor will open or close the relay to correspond to the occupancy and light level status of the room.

To quickly test the unit, turn the time delay to minimum and cover the light level lens (see Fig.1). Wait for the warm-up period to end. Move out of the sensor's view. Lights should turn OFF after 30 seconds. Move into the sensor's view. The sensor's Red LED should blink and the lights should turn ON.

Red LED on power module does not blink:

Check sensor wire connections. Verify the red and black wires are tightly secured.

Red LED blinks but lights do not turn ON:

1. Make sure that power to the sensor has been ON continuously for at least one minute, then
   a) Turn OFF power to the sensor.
   b) Check blue and violet wire connections
   c) Turn ON power to the sensor.
   d) The load should come ON. If not, continue with step 2.
2. Cover the light sensor lens to simulate darkness. If the light turns ON, the light level setting needs to be adjusted. If set for minimum, more than 2fc of ambient light causes the lights to be held OFF. See ADJUSTMENTS: Light Level Setpoint.
3. Check power connections to the light fixture.

Lights will not turn OFF:

1. If there is no motion from people or equipment in the sensor's view but the red LED blinks, look for any nearby source of IR energy in motion, such as turbulent air from a heating or cooling supply, or other sources. Divert the air supply away from the sensor, or move the sensor.
2. Verify time delay. The time delay can be set from 15 seconds to 30 minutes. Ensure that the time delay is set to the desired delay and that there is no movement within the sensor's view for that time period.
3. Check DIP switch 8 setting. If it is ON, it overrides the PIR function and keeps the load ON.
4. Check sensor wire connections. Verify blue and violet wires are secure.

ORDERING INFORMATION

Catalog #	Description
HB300*-L#+	High bay low voltage occupancy sensor consists of: • HB300* Power Module • An HBL# lens (L# indicates the lens number) (see COVERAGE GUIDE)
HBNB3	Back box with 2 chase nipples and nuts; 1 short (0.88") for connection to plastic, 1 long (1.24") for connection to metal
HBEM3	Extender module with 2 chase nipples and nuts 1 short (0.88") for connection to plastic, 1 long (1.24") for connection to metal

* See available feature suffix indicators below:

P indicates dual PIR detectors,
D indicates daylight feature,
DR indicates daylight plus isolated relay,
C is for colder ambient temperature applications: -40° to 131°F (-40° to 55°C)
\+ an additional -B suffix includes the HBNB3 back box

All units are White.

Please Recycle

WARRANTY INFORMATION

Watt Stopper/Legrand warranties its products to be free of defects in materials and workmanship for a period of five (5) years. There are no obligations or liabilities on the part of Watt Stopper/Legrand for consequential damages arising out of, or in connection with, the use or performance of this product or other indirect damages with respect to loss of property, revenue or profit, or cost of removal, installation or reinstallation.

WattStopper | legrand®
2800 De La Cruz Boulevard, Santa Clara, CA 95050
Technical Support: 800-879-8585 www.wattstopper.com
08060r2 3/2007