Multi-Button Low Voltage Switch

Architectural Lexan plate, screwless cover

Pilot light indication

Simple to label with protective plastic cover

1, 3, 5 or 9 button models available

PROJECT

LOCATION/TYPE

Product Overview

Description

WattStopper's multi-button low voltage switches offer flexible and user-friendly lighting control via 1, 3, 5, or 9 button models.

Operation

The multi-button switches toggle lighting on and off by signaling WattStopper lighting control panels or occupancy sensors (with manual control capability). If lights are off, pressing the button turns lights on. If lights are on, pressing the button turns them off.

Adjacent to each standard button is a red pilot light indicating the status of controlled lighting when connected to a pilot light output from a lighting control panel. This is particularly useful when switches are placed in a location where the controlled lighting cannot be seen. Terminals on the back of the switch provide easy wiring without additional connectors.

Multiple Push Buttons

The multi-button switches provide control of multiple lighting groups or zones from a single location. Depending on the configuration of the lighting control panel, the single larger button on the 3, 5 and 9 button switches can be used for specialized control functions such as all on, all off, or cleaning operation. The switch's multiple push buttons and compact design replace multiple gang switch locations with a single or double gang wall switch.

Applications

From single room, single switch, to central, multiple switch station locations, the multi-button switches keep a consistent and pleasing look. Consistency in appearance is maintained with WattStopper dataline switches or other architecturally designed switches. The multi-button switches are particularly well suited for demanding switch locations such as reception desk areas, nursing stations, guard stations and administration areas.

Features

- 1, 3, 5, or 9 button models available
- Pilot light next to each standard button for remote indication of the lighting status
- Locator light bar helps users find the switch easily in the dark
- Mounts in a single or double gang box; no special plates or large gang boxes are required
- Lens caps are removable for easy labeling of standard buttons
- Terminal back screws simplify wiring
- Screwless cover plate enhances switch aesthetics
- Low voltage switch wiring simplifies installation making it easy to add switches anywhere needed and to accommodate multiple switching locations
- Architectural design matches WattStopper dataline and other switches
- Qualifies for use in ARRA-funded projects

WattStopper®
www.wattstopper.com
800.879.8585

Specifications

- Compatible with: WattStopper Lighting Integrator and legacy panel programmable inputs; occupancy sensors with manual control capability; LC-100 intelligent power pack
- Removable lens caps for labeling each standard button with 3/8" (9mm) laminated tape; larger button does not have labeling capability
- Pilot and location light LED, 18-30 VAC rectified or DC; each LED draws 5 mA @ 24 V
- Custom engraving available
- Available in white, ivory, almond, or gray
- Dimensions: 2.75" W x 4.5" H x .94" D (69.8mm x 114.3mm x 23.9mm) for 1, 3, and 5 button switch; 4.5" W x 4.5" H x .94" D (114.3mm x 114.3mm x 23.9mm) for 9 button switch
- One year warranty

Wiring & Dimensions

Wire Connections

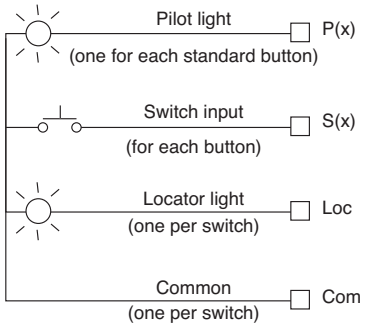

Switch Configurations

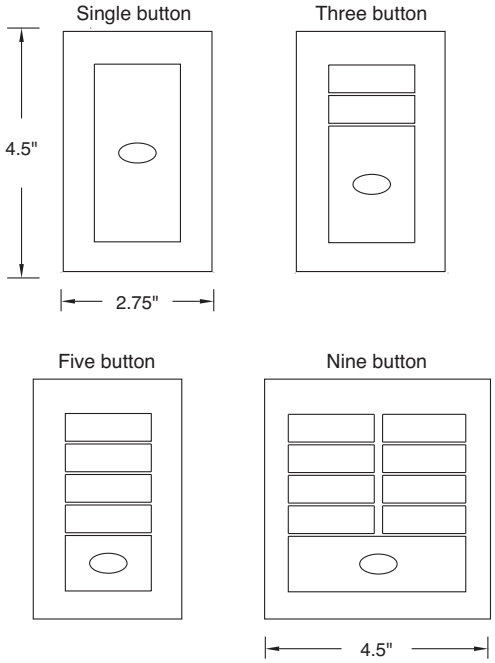

Product Features

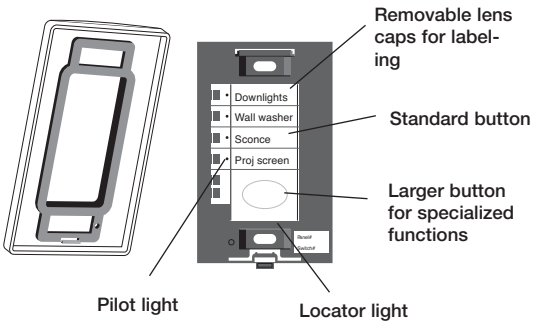

Ordering Information

Catalog No.	Color	Description	Standard Button	Larger Button	Size	Max Pilot Load
☐ L1S-7	White	Single button switch	0	1*	Single-gang	10 mA
☐ L1S-2	Ivory					
☐ L1S-4	Light Almond					
☐ L1S-9	Gray					
☐ L3S-7	White	Three button switch	2*	1	Single-gang	15 mA
☐ L3S-2	Ivory					
☐ L3S-4	Light Almond					
☐ L3S-9	Gray					
☐ L5S-7	White	Five button switch	4*	1	Single-gang	25 mA
☐ L5S-2	Ivory					
☐ L5S-4	Light Almond					
☐ L5S-9	Gray					
☐ L9S-7	White	Nine button switch	8*	1	Double-gang	45 mA
☐ L9S-2	Ivory					
☐ L9S-4	Light Almond					
☐ L9S-9	Gray					

* with pilot light