LMRC-101

Digital Lighting Management (DLM)

Single Relay Room Controller

Quick Start Guide

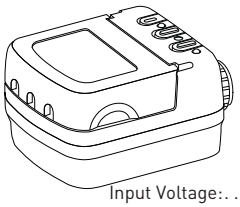

THIS UNIT IS PRE-SET FOR PLUG n' GO™ OPERATION, ADJUSTMENT IS OPTIONAL.

For full operational details, adjustment and more features of the product, see the DLM System Installation Guide provided with the LMRC-102 room controller, and also available at www.wattstopper.com

INSTALLATION SHALL BE IN ACCORDANCE WITH ALL APPLICABLE REGULATIONS, LOCAL AND NEC CODES.

Wire connections shall be rated suitable for the wire size (lead and building wiring) employed.

For Class 2 DLM devices and device wiring:

To be connected to a Class 2 power source only.

Do not reclassify and install as Class 1, or Power and Lighting Wiring.

WARNING: Do not install to cover a junction box having Class 1, 3 or Power and Lighting Circuits.

Input Voltage: 120/230/277VAC, 50/60Hz

Load Requirements:
- Incandescent . . . . . 20A @ 120VAC
- Ballast . . . . . 20A @ 120/277VAC
- Motor . . . . . 1Hp @ 120/240VAC

Output . . . . . 150mA @ 24VDC

DLM Local Network Characteristics:
- Provides low voltage power over Cat 5e cable (LMRJ).
- Supports up to 24 communicating devices, including 4 LMRC-10x or LMPL-101 max per each DLM Local Network.
- Free topology up to 1,000ft of low voltage cable.

Environment:
- Operating Temperature. . . . . 32° to 104°F (0° to 40°C)
- Storage Temperature . . . . . 23° to 176°F (-5° to 80°C)
- Relative Humidity. . . . . 5 to 95% (non condensing)

Patent Pending

PLACEMENT EXAMPLE

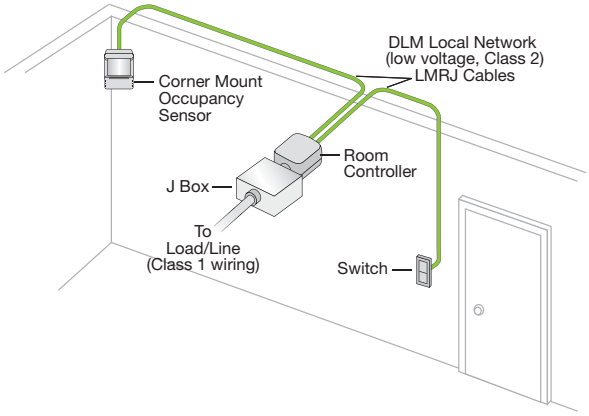

CAUTION: TURN THE POWER OFF AT THE CIRCUIT BREAKER BEFORE WIRING.

WARNING: TO CONNECT A COMPUTER TO THE DLM LOCAL NETWORK USE THE LMCI-100. NEVER CONNECT THE DLM LOCAL NETWORK TO AN ETHERNET PORT – IT MAY DAMAGE COMPUTERS AND OTHER CONNECTED EQUIPMENT.

MOUNTING THE CONTROLLER

The LMRC-101 room controller can either be mounted external to a junction box, placing it in the plenum space or mounted directly inside a 4" x 4" junction box.

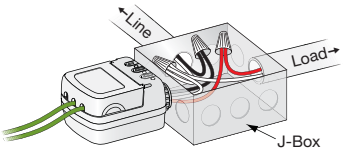

Outside a 4" x 4" box

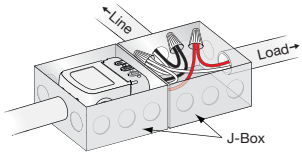

Inside a 4" x 4" box

ATTACHING CABLES

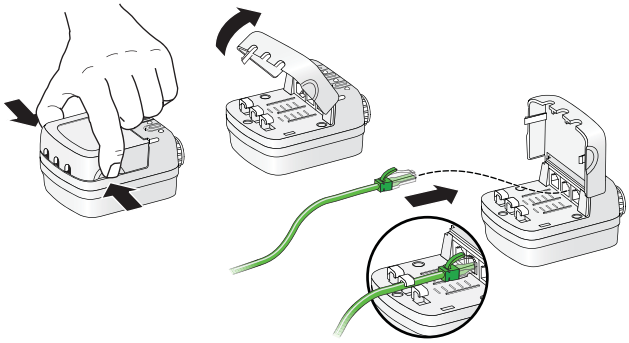

Remove rubber jack covers if using all 3 RJ45 receptacles. Leave covers in place for all unused receptacles.

CONNECTIVITY

The LMRC-101 communicates to all other DLM devices connected to the DLM Local Network. Connection drawings are for example only. The low voltage LMRJ cables can connect to any DLM device with an open RJ45 receptacle.

All line voltage wiring is #12 AWG.

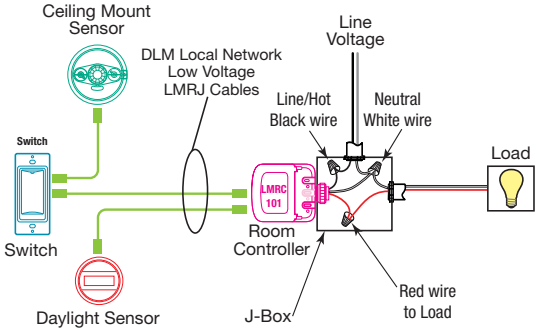

PLUG n' GO OPERATION (PnG)

Plug n' Go supports the most energy efficient control strategy. For example, if one load, one switch and one occupancy sensor are connected to the DLM Local Network, the system will operate the load Manual-On, Automatic-Off.

See DLM device Quick start guides to determine how each device affects the PNG operation of the LMRC-101.

Load Control Arbitration

To take full advantage of automatic PnG configuration, review these simple rules about load control arbitration.

After the room controllers are connected to the DLM Local Network and powered up they automatically negotiate to determine which controller becomes the Master and the load numbers for each relay on the DLM Local Network.

The **Master** is the controller with the most load relays. If more than one controller has the most relays, the one with the highest serial number becomes the Master.

Load ON/OFF button

Blue LED ON when load is ON

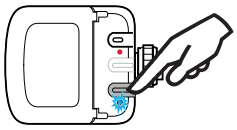

The LMRC-101 has only one load. In a DLM local network with only LMRC-101 room controllers, the LMRC-101 with the highest serial number is the Master, carrying Load 1. The next highest serial number would have Load 2, and so forth.

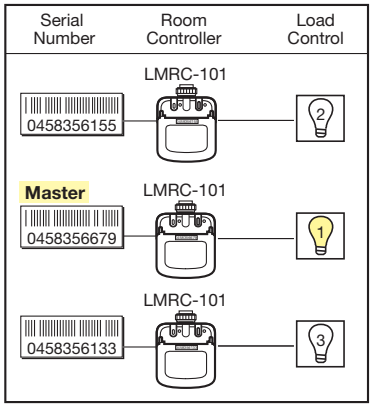

OPTIONAL UNIT ADJUSTMENT - PUSH n' LEARN (PnL)

Load Selection Procedure

A configuration button (Config) allows access to our patented Push n' Learn™ technology to change binding relationships between sensors, switches and loads.

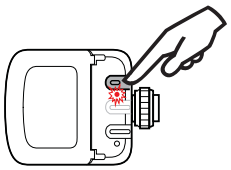

Config button & red LED

Step 1: Enter Push n' Learn

Press and hold the Config button (on any DLM device) for 3 seconds.

The red LED on the LMRC-101 begins to blink as does the red LED on ALL other communicating devices connected to the DLM local network.

The red LEDs continue to blink until you exit PnL mode.

All loads in the room turn OFF immediately after entering PnL, then one load will turn ON. This is Load #1, which is bound to switch button #1 and occupancy sensors as part of the Plug n' Go factory default setting. **All switch buttons and sensors that are bound to this load have their blue LED solid ON.**

Step 2: Load selection

Press and release the Config button to step through the loads connected to the DLM local network. As each load turns ON note the devices (switch buttons and sensors) that are showing a bright solid blue LED. These devices are currently bound to the load that is ON. The blue LED on the room controller or plug load controller connected to the load is also lit.

- To **unbind** a switch button from a load, press the switch button while its blue LED is ON bright. The blue LED goes dim to indicate the button no longer controls the load that is currently ON.
- To **unbind** an occupancy sensor, press the up (▲) or down (▼) adjustment button while its blue LED is ON. The blue LED turns OFF to indicate the sensor no longer controls the load that is currently ON.

Pressing the switch or up (▲) or down (▼) button again while the load is ON **rebinds** the load to the button or sensor and the blue LED illuminates brightly.

Step 3: Exit Push n' Learn

Press and hold the Config button until the red LED turns OFF, approximately 3 seconds.

TROUBLESHOOTING

Loads do not operate as expected.

LEDs on a switch or sensor don't light	1. Check to see that the the device is connected to the DLM local network. 2. Check for 24VDC input to the device: Plug in a different DLM device at the device location. If the device does not power up, 24VDC is not present. • Check the high voltage connections to the room controller and/or plug load controller(s). • If high voltage connections are good and high voltage is present, recheck local network connections between the device and the room controller and/or plug load controller(s).
The wrong lights and plug loads are controlled	1. Configure the switch buttons and sensors to control the desired loads using the Push n' Learn adjustment procedure.
LEDs turn ON and OFF but load doesn't switch	1. Make sure DLM local network is not in PnL. 2. Check load connections to room controllers and/or plug load controllers.